Article number: V4S30CAE11100

Panel fans

Technical data

Voltage	U	230	V
Phase		1	~
Frequency	f	50	Hz
Speed	n	1415	RPM
Power consumption	P ,	100	W
Nominal current	Inam	0.5	A
Maximum current	Imax	0.7	A
Capacitor		03/400	µF/V
Ambient temperature	T amb min/max	-25 ... 40	·C
Insulation Class		CL.F	
IP Class Fan		IP55	
Sound pressure level (2 m)	Lp(meas.)	58	dB(A)
Sound pressure level (7 m)	Lp (calc.)	47	dB(A)
Packing dimensions		460x460x315	mm

Please note: Picture may deviate from original product

Fan details

Impeller blades	6
Impeller type	3
Impeller system	C
Impeller material	pp

Approval(s)

CE IR[

Control options

Triac controller	Yes
Transformer	Yes
Frequency drive	No
Intelligent Fan Drive	Yes

Wiring diagram - Fan

BA01 - 1 Phase - Standard - CCW

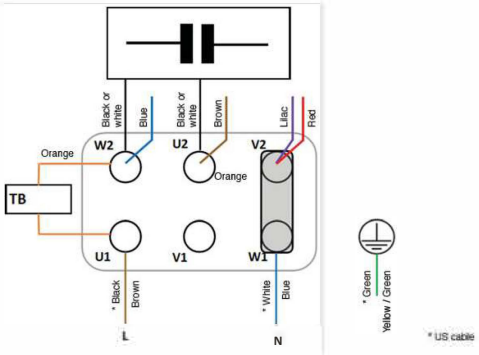

Characteristics

0 Pa	2250 m^3/h
50 Pa	1650 m^3/h

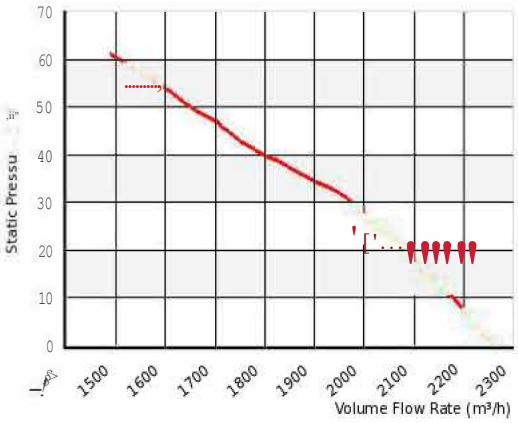

Dimensions

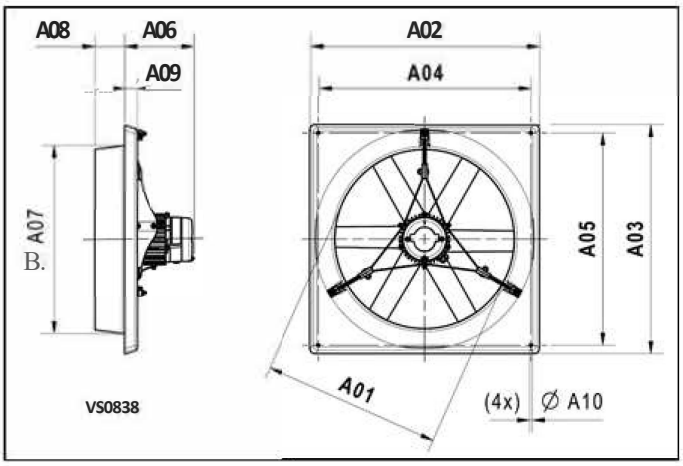

AOI:	312 mm
A02:	443mm
A03:	443mm
A04:	395 mm
A05:	395 mm
AOG:	192 mm
A07:	340mm
AOB:	84mm
A09:	36mm
AIO:	8mm

KaRo BV
Tulpenmarkt 4
1681 PK Zwaagdijk
T 0228 56 31 35
E info@karobv.nl